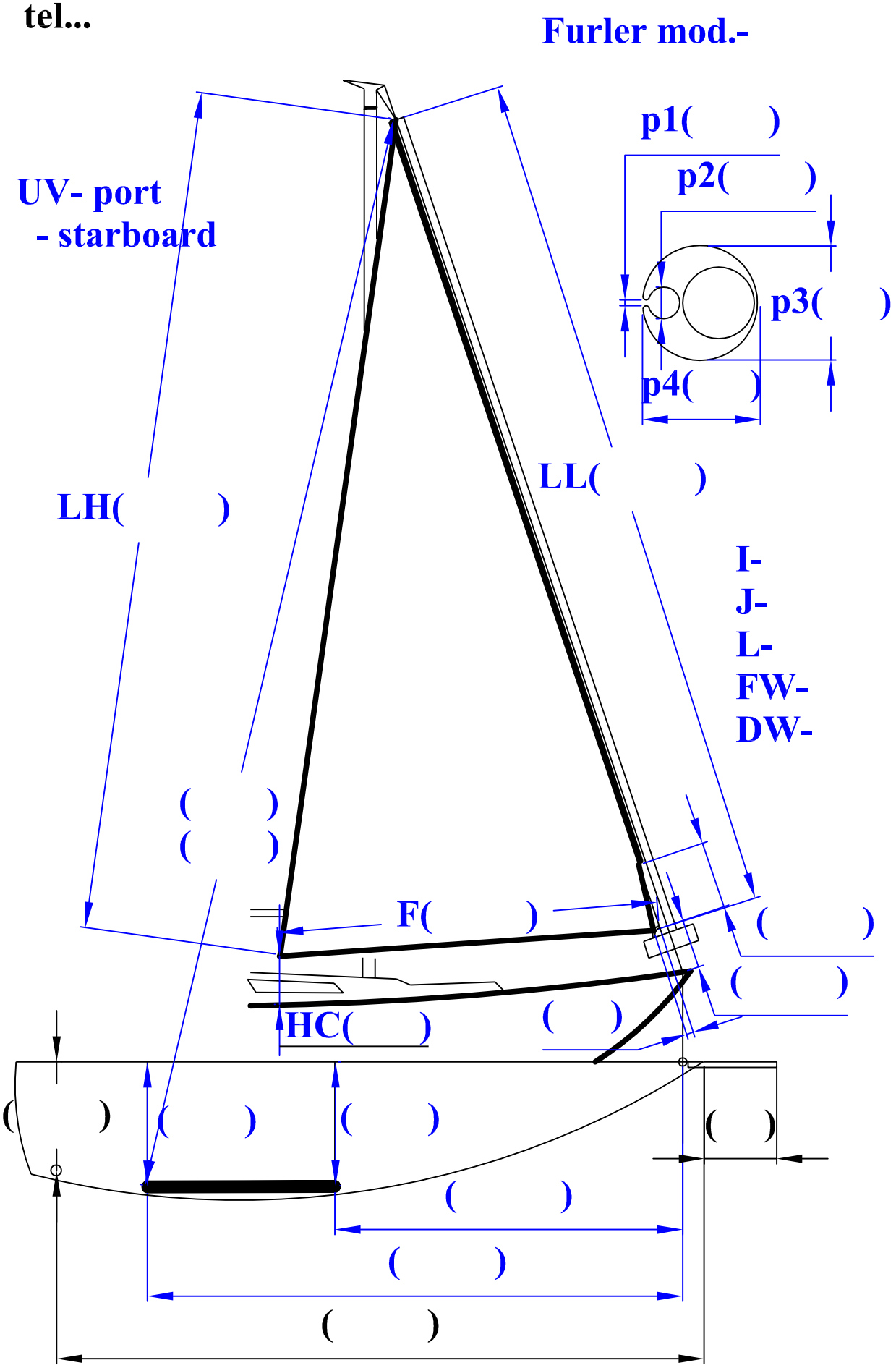Yacht...
Owner...
tel...